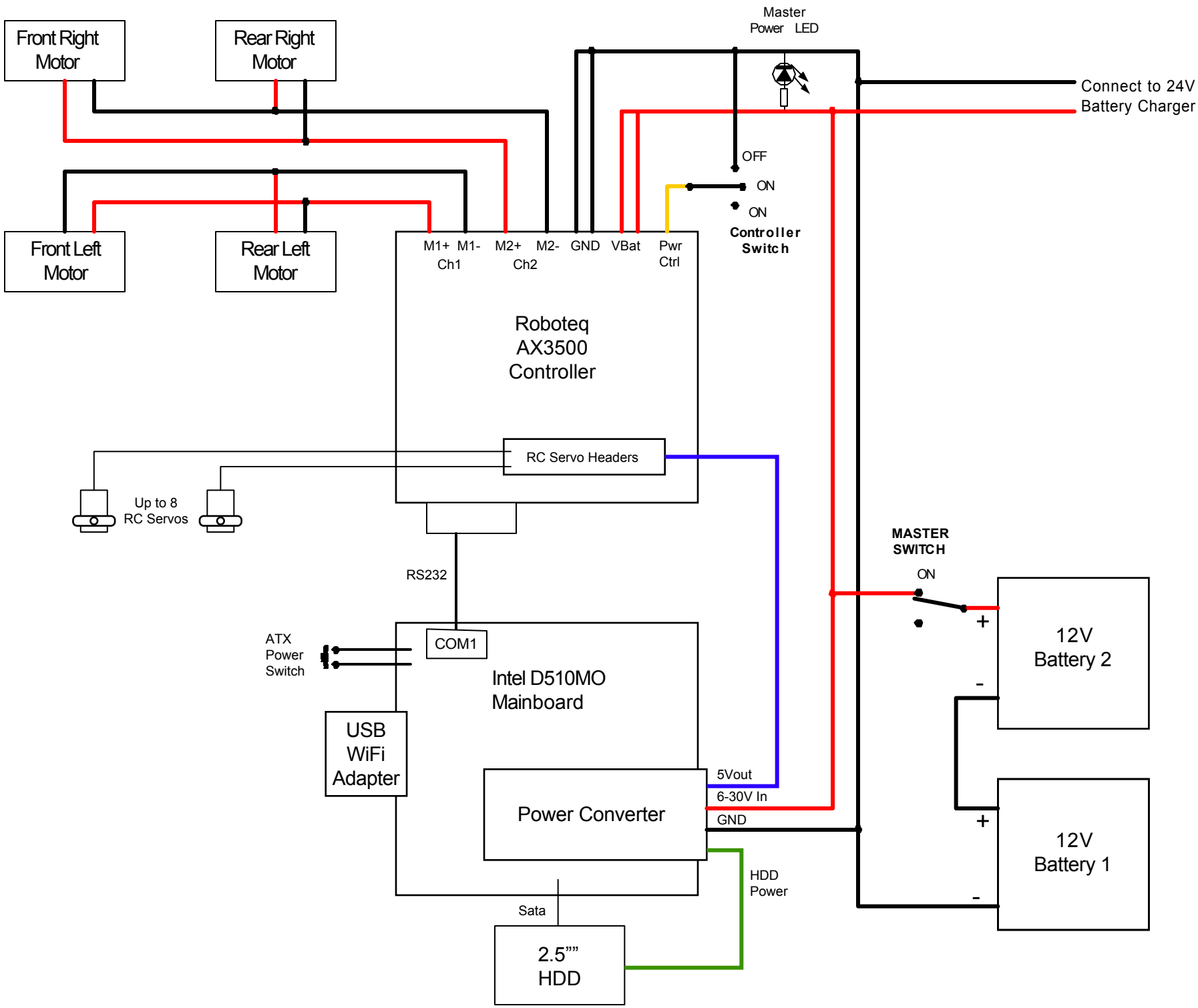
Front Right Motor
Rear Right Motor
Front Left Motor
Rear Left Motor
Master Power LED
Connect to 24V Battery Charger
OFF
ON
ON
Controller Switch
M1+ Ch1
M1-
M2+ Ch2
M2-
GND
VBat
Pwr Ctrl
Roboteq AX3500 Controller
RC Servo Headers
Up to 8 RC Servos
RS232
MASTER SWITCH
ON
+
-
12V Battery 2
ATX Power Switch
COM1
Intel D510MO Mainboard
USB WiFi Adapter
Power Converter
5Vout
6-30V In
GND
+
-
12V Battery 1
HDD Power
Sata
2.5"" HDD